HSF

NOTES:
Current Rating: 5.0AMP
Contact Resistance: 25mΩ Max
Withstand Voltage: 1000V AC/DC
Insulation Resistance: 5000MΩ Min
Operation Temperature: −55℃ to +105℃

Contact Material:Brass
Contact plating:Au Or Sn over Ni
Insulator Material:PBT+30%G.F UL94V-0
Shell Material:Spcc,Plating: Ni Plated
Rivet/Harpoon:Brass,Sn over Ni
Screw:Brass,Plating Ni Plated

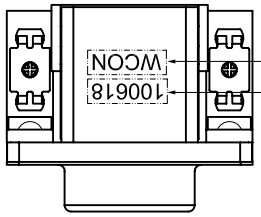

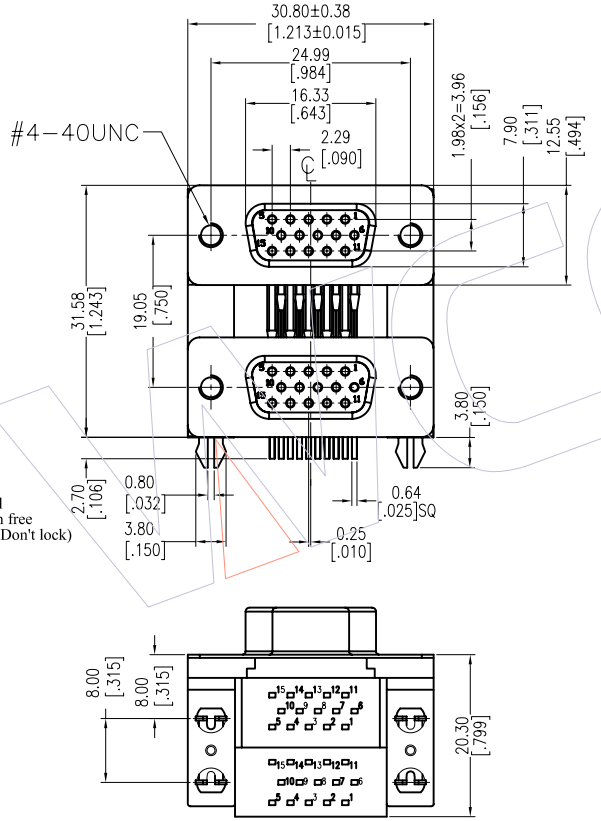

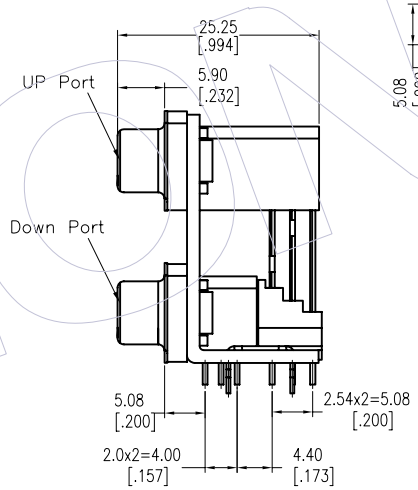

Recommended P.C.B Layout(Top Side)
(PCB BOARD TOLERANCE±0.05)

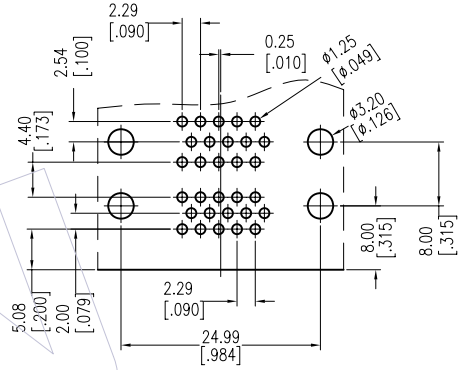

Ordering Information

6201- B 15F X 15F X S0 X X

- B: Dim of Dual Port Center B=19.05mm
- X: Up Port Color B=Black U=Blue W=White G=Grey
- 15F: Down Port Color B=Black U=Blue W=White G=Grey
- S0: Contact Plating: S0=Gold Flash/Tin S3=10u"Gold/Tin S4=15u"Gold/Tin S5=30u"Gold/Tin SN=Tin
- X: Product Type 1=PBT Normal 2=PBT halogen free 4=With Screw(Don't lock)

Part No.	Up Port Color	Down Port Color	Locating plate Color	Insulator Materail
6201-B15FU15FUS014	Blue	Blue	Blue	Normal
6201-B15FU15FUS011	Blue	Blue	Black	
6201-B15FB15FUS011	Black	Blue	Black	
6201-B15FU15FUS012	Blue	Blue	Black	Halogen Free
6201-B15FB15FUS012	Black	Blue	Black	

REV	DATE	MODIFICATION DESCRIPTION	CHANGE
A0	2013/01/10	NEW	------

OPERATION	
X.X	±0.40
X.XX	±0.25
X.XXX	±0.15
Angle	± 3°
DIM	TOL

DRAW	JYHuang	DATE	2013/01/10
CHECK		DATE	
APPROVE		DATE	

SCALE	FIT
UNIT	mm
SIZE	A4
SHEET	1/1
PROJ.	

PART NO. 6201-B15FX15FXS0XX

TITLE: HD-SUB Right Angle Connector Dual Row

Customer NO.

WCON
Http: www.wcon.com

WCON-Dongguan
Tel: +86 769 85358920
Fax: +86 769 85358915
E-mail: sales@wcon.com

WCON-Kunshan
Tel: +86 512 57468408
Fax: +86 512 57468468
E-mail: salesks@wcon.com